Y11	AC compressor clutch
B226	AC compressor clutch lock sensor
K143	AC compressor clutch relay
M63	AC condenser blower motor
K129-I	AC condenser blower motor relay - high speed
K129-II	AC condenser blower motor relay - low speed
A63-I	AC control module
A63-II	AC control module - rear AC
B53-I	AC evaporator temperature sensor
B53-II	AC evaporator temperature sensor - rear AC
S426	AC master switch, rear
Y156	AC refrigerant control valve
S338	AC refrigerant dual pressure switch
B102	AC sunlight sensor
M112-I	AC/heater air direction motor
M112-II	AC/heater air direction motor - rear AC
B163	AC/heater air intake temperature sensor
M114-I	AC/heater air mix flap motor
M114-II	AC/heater air mix flap motor - rear AC
A176	AC/heater blower control module
M7-I	AC/heater blower motor
M7-II	AC/heater blower motor - rear AC
S292	AC/heater function control panel
S374	AC/heater function control panel - rear AC
M105	AC/heater recirculation flap motor
31	Battery -
30	Battery +
X1-I	Data link connector (DLC) 1
X1-II	Data link connector (DLC) 2
A161	Digital multifunction display
A35	Engine control module (ECM)
S186-I	Engine coolant temperature (ECT) switch 1
S186-II	Engine coolant temperature (ECT) switch 2
F	Fuse
X28-I	Fuse box/relay plate, engine bay
X28-II	Fuse box/relay plate, fascia
A104	Glow plug control module
K28-I	Heater blower relay
K28-II	Heater blower relay - rear AC
R6	Heater blower speed resistor - rear AC
Y99	Idle air control (IAC) valve
15	Ignition switch - ignition ON

A150	Injection pump assembly
R4	Instrument illumination rheostat
B61	Outside air temperature sensor
K196	Tail lamps relay

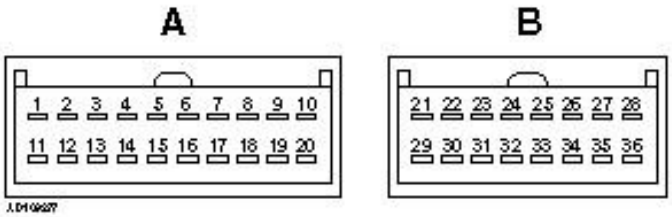

bl = blue	br = brown	el = cream	ge = yellow
gn = green	gr = grey	nf = neutral	og = orange
rs = pink	rt = red	sw = black	vi = violet
ws = white	hbl = light blue	hgn = light green	rbr = maroon
x = braided cable	y = high tension	z = non-cable connection	

Manufacturer: Mitsubishi
Engine code: 6G74
Tuned for: R-Cat

Model: Shogun/Pajero/Montero (00-07) 3,5 GDI
Output: 149 (202) 5000
Year: 2000-07

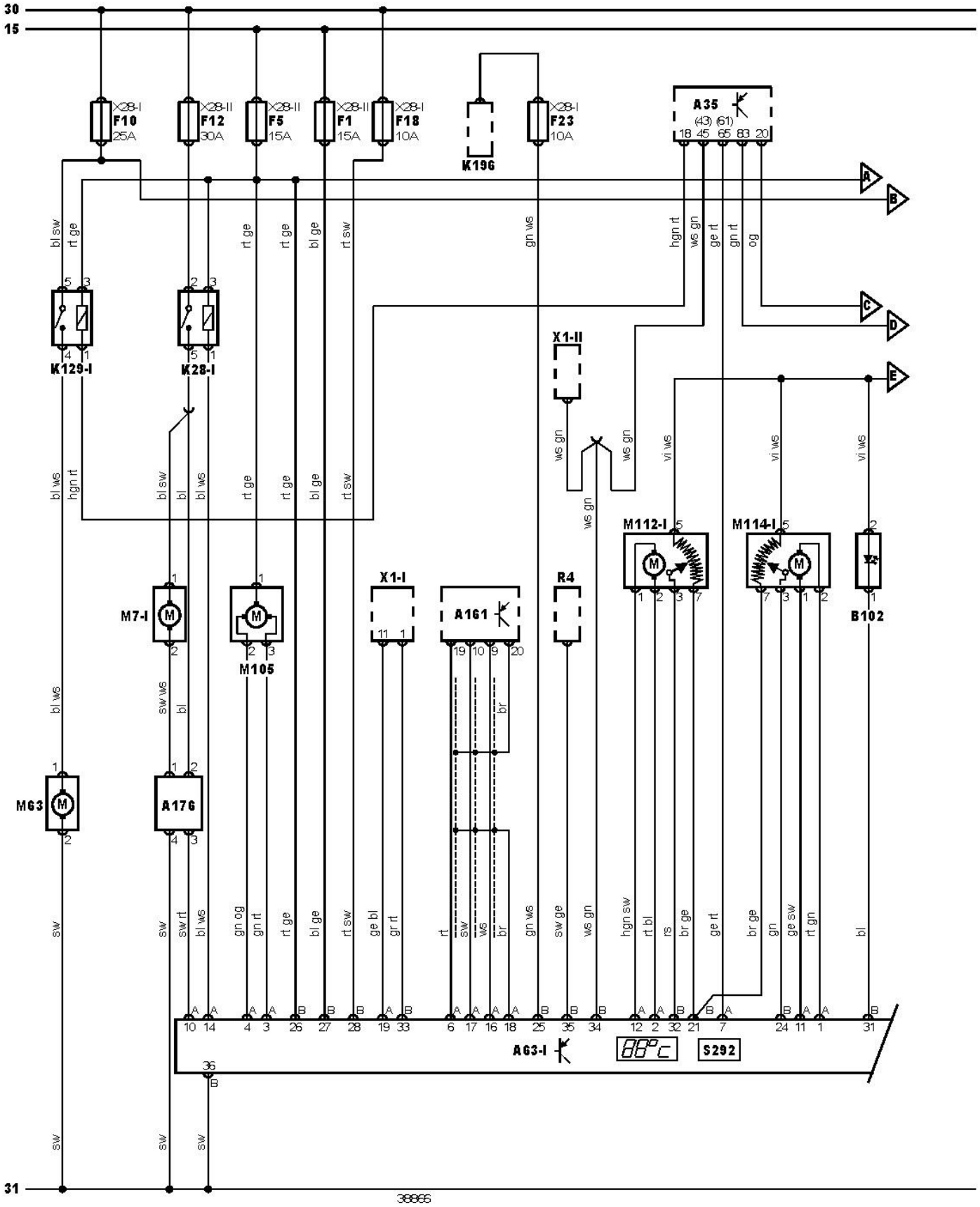

Manufacturer: Mitsubishi
Engine code: 6G74
Tuned for: R-Cat

Model: Shogun/Pajero/Montero (00-07) 3,5 GDI
Output: 149 (202) 5000
Year: 2000-07

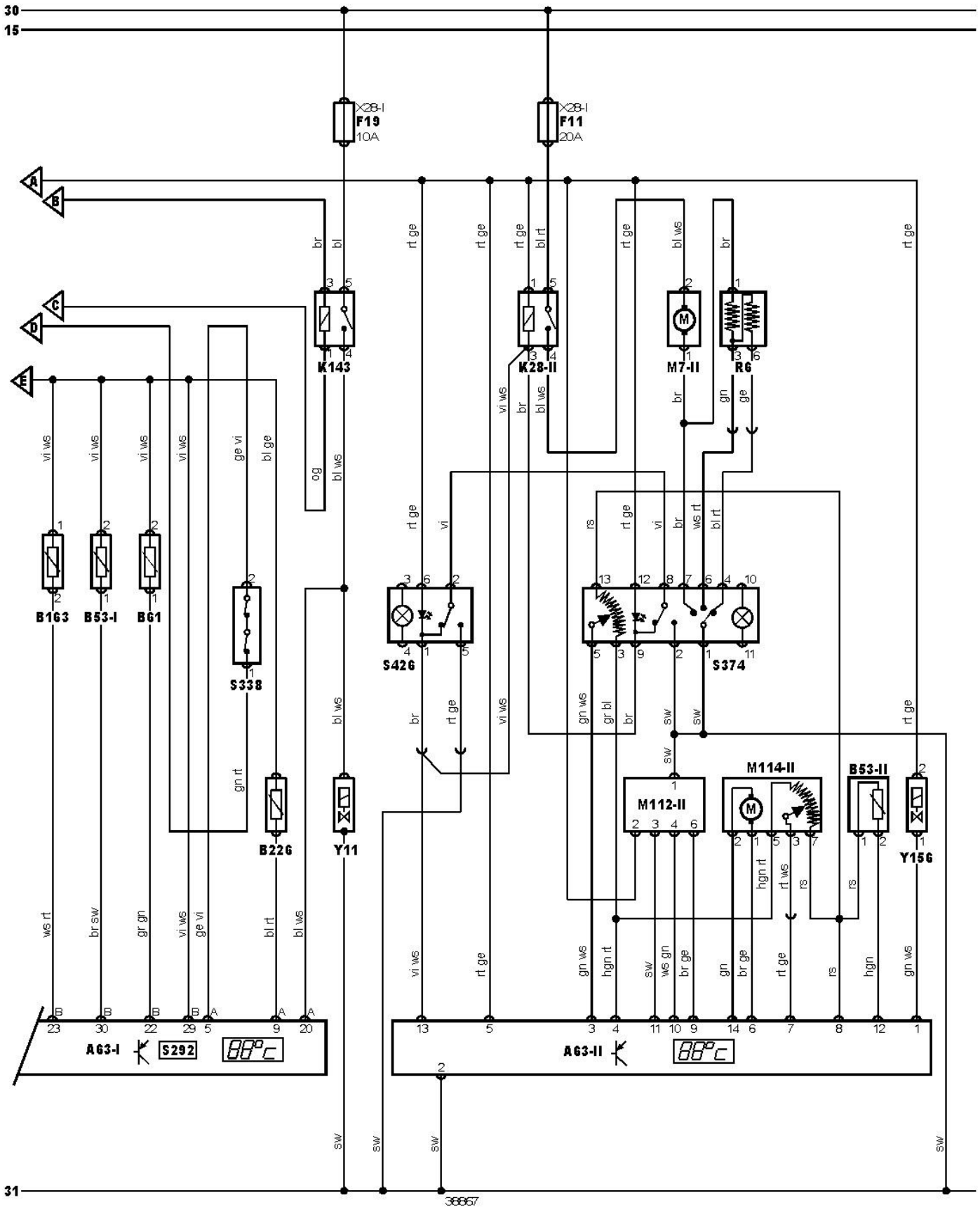

Manufacturer: Mitsubishi
Engine code: 6G74
Tuned for: R-Cat

Model: Shogun/Pajero/Montero (00-07) 3,5 GDI
Output: 149 (202) 5000
Year: 2000-07